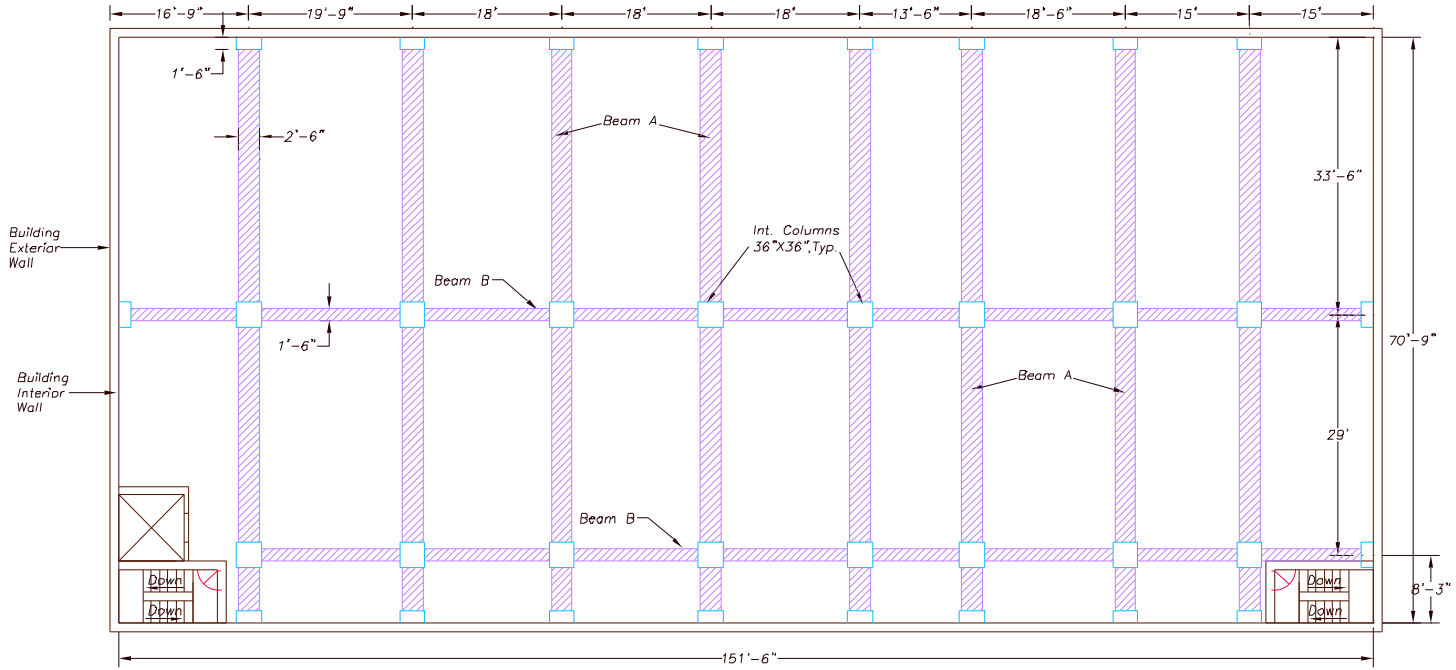

Beam Layout Below Upper Level Floor

IN-DELTA STORAGE PROGRAM		PUMPING PLANT	
		Beam Layout Below Upper Level Floor	
SCALE: 1"=15'	DATE REV. 04/17/03	FIGURE C20	SHEET 1 Of 1

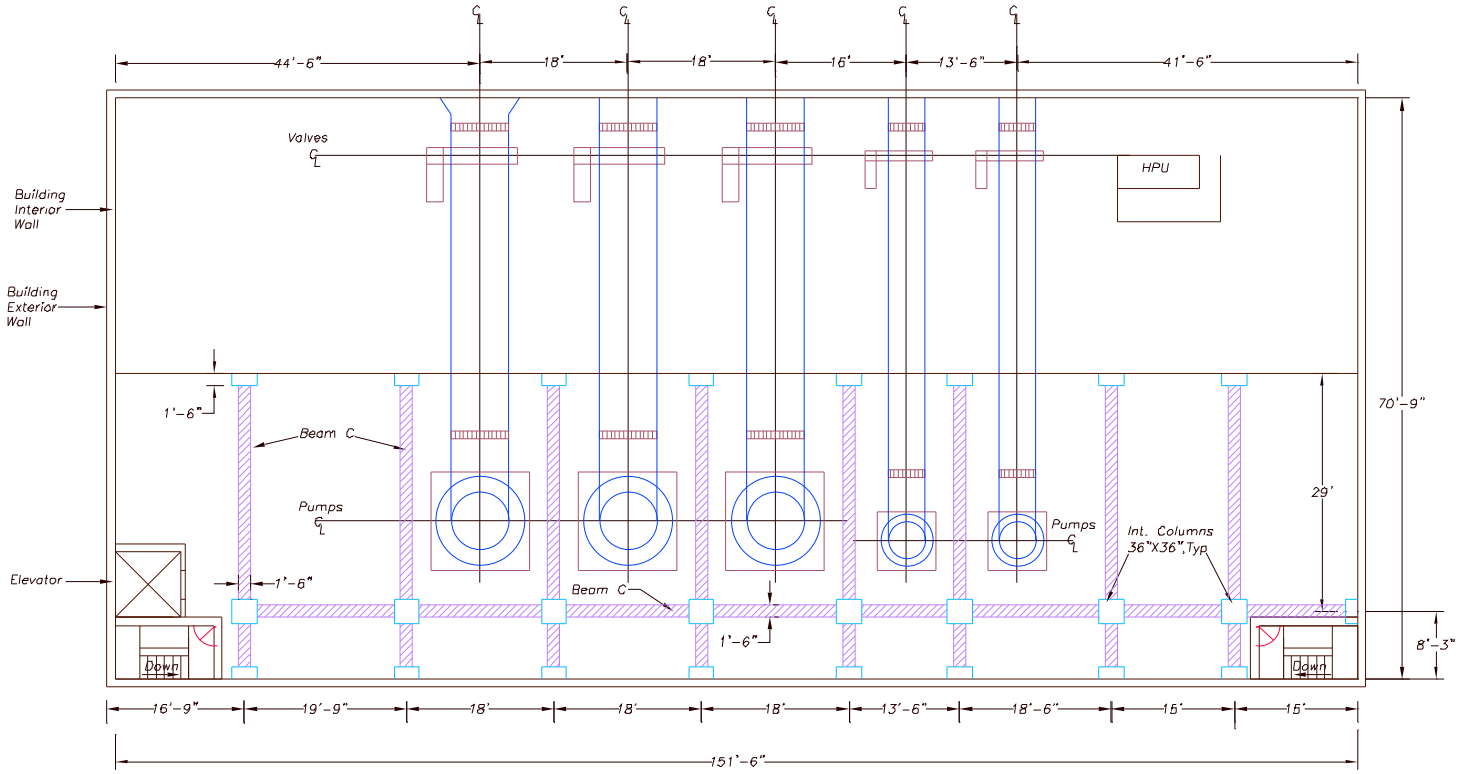

Beam Layout Below Middle Level Floor

IN-DELTA STORAGE PROGRAM		PUMPING PLANT	
		Beam Layout Below Middle Level Floor	
SCALE: 1"=15'	DATE REV. 04/16/03	FIGURE C21	SHEET 1 Of 1

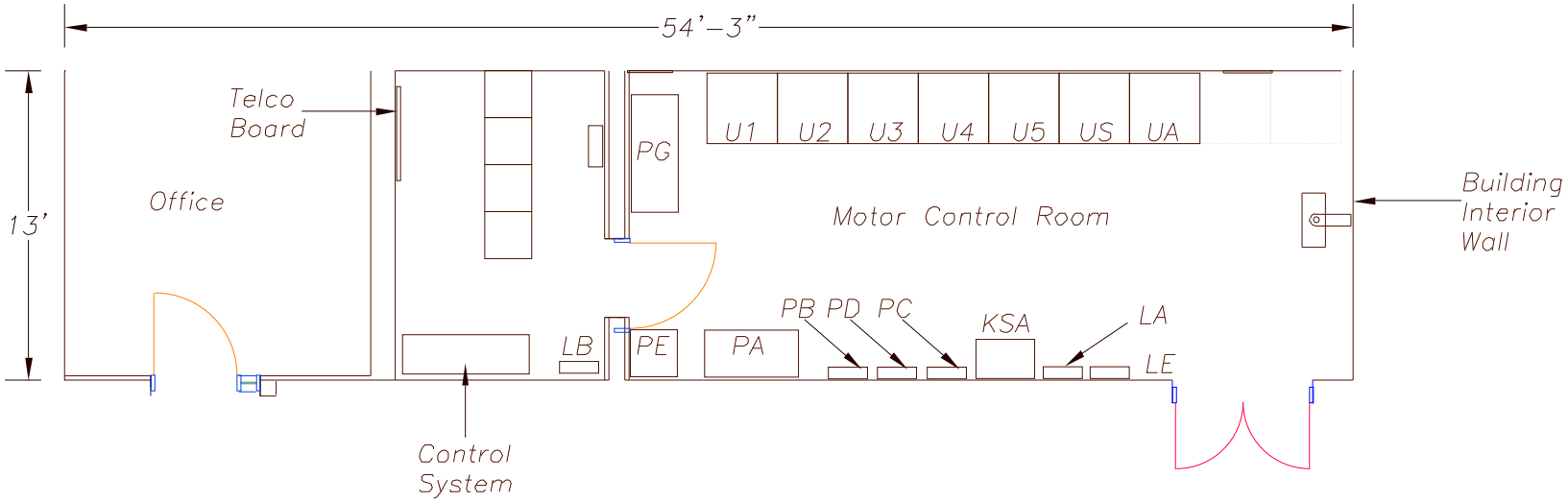

Typical Control Room

IN-DELTA STORAGE PROGRAM		PUMPING PLANT	
		Typical Control Room	
SCALE: 1"=5'	DATE REV. 04/17/03	FIGURE C22	SHEET 1 Of 1

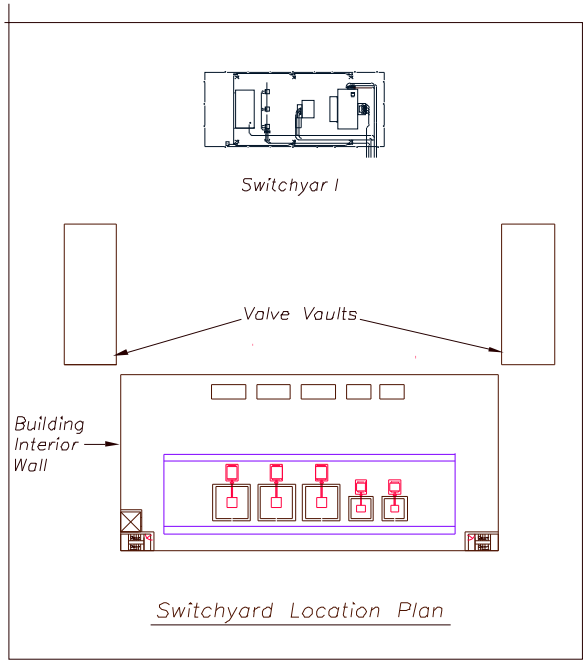

Switchyard Location Plan

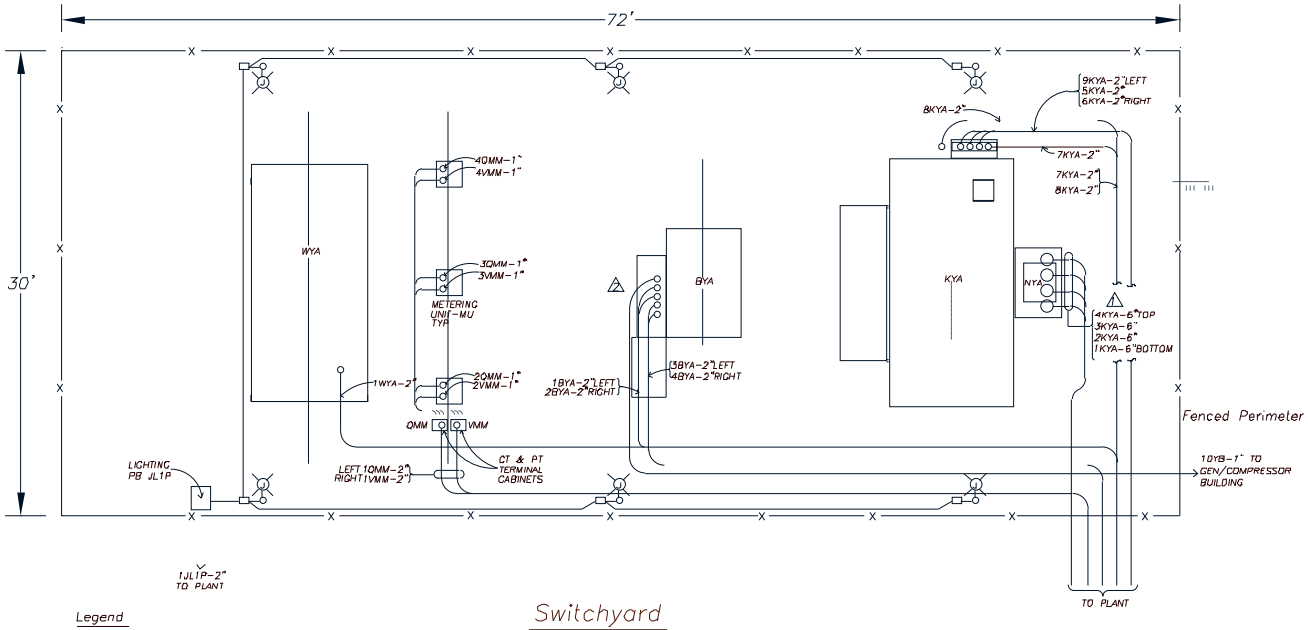

Switchyard

Legend

WYA-115kV Disconnect Switch
BYA-115kV Circuit Breaker
KYA-115-4.16kV Transformer

IN-DELTA STORAGE PROGRAM		PUMPING PLANT	
		Typical Switchyard	
SCALE: 1"=5'	DATE REV. 04/21/03	FIGURE C23	SHEET 1 Of 1

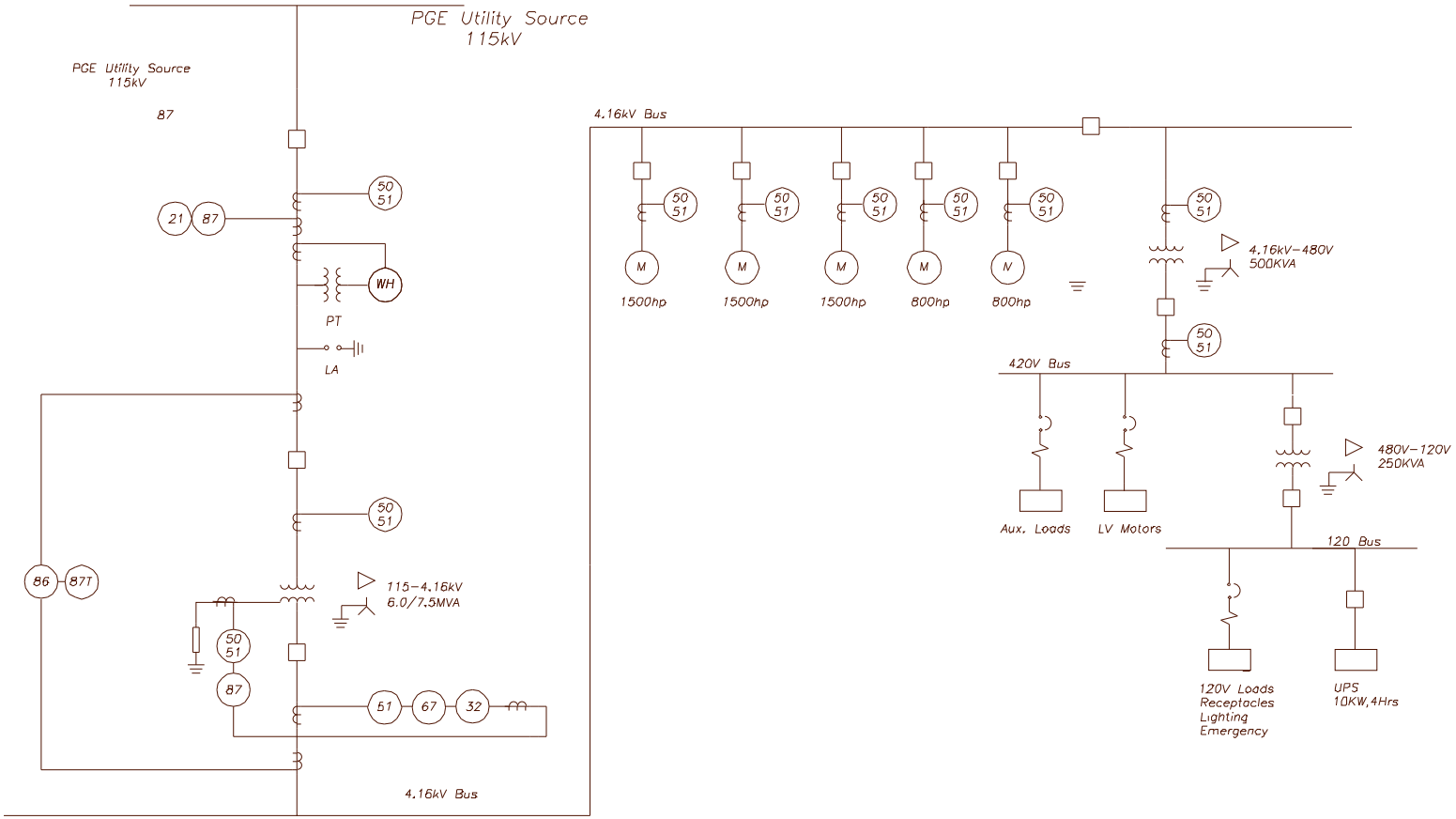

Typical Single Line

IN-DELTA STORAGE PROGRAM		PUMPING PLANT	
		Typical Single Line	
SCALE: 1"=2'	DATE REV. 04/23/03	FIGURE C24	SHEET 1 Of 1

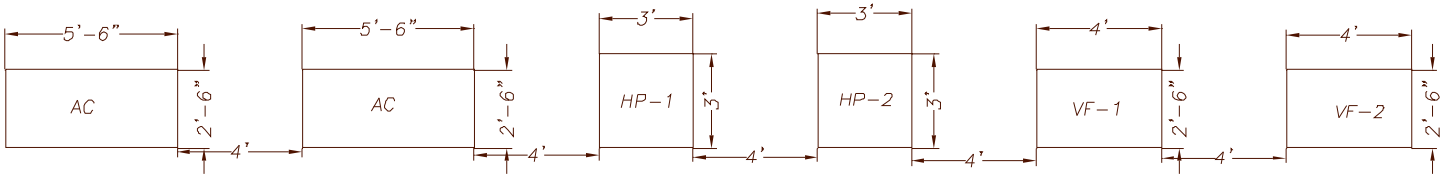

NOTES:

1. AC: Air Conditioning Only
2. HP: Heat Pump
3. VF: Ventilation Fan
4. Layout shows external components only of HVAC system.
5. HP-1 and HP-2 should be located close to the office and control rooms, respectively.
6. The Air Conditioning Units should be located close to the Motor Control Room.
7. The Ventilation Fans may be located at any convenient location near the plant.

HVAC Layout

IN-DELTA STORAGE PROGRAM		PUMPING PLANT	
		HVAC Layout	
SCALE: 1"=2'	DATE REV. 04/21/03	FIGURE C25	SHEET 1 Of 1

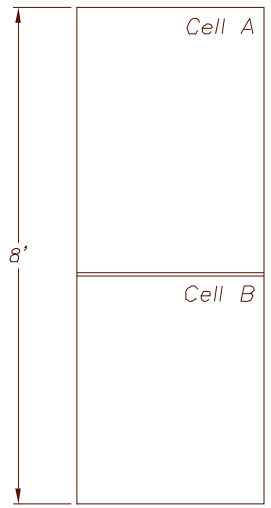

Section
1

Elevation

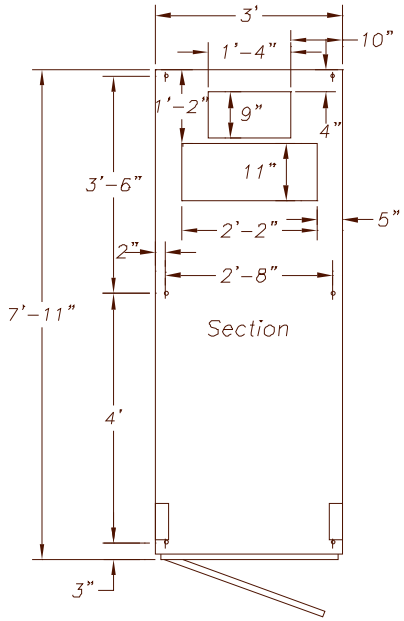

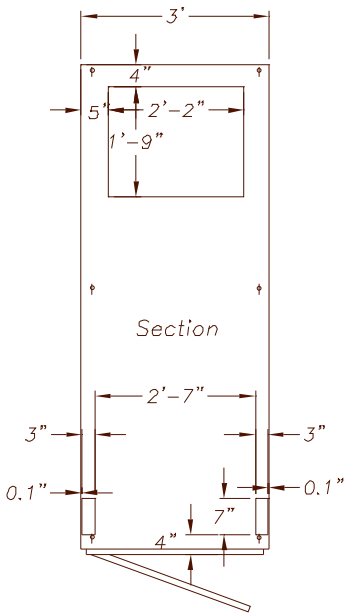

Plan View

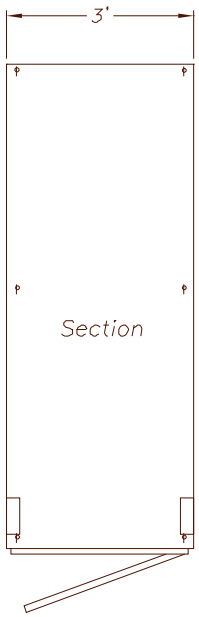

IN-DELTA STORAGE PROGRAM		PUMPING PLANT	
		Typical Medium Voltage Switchgear Enclosures	
SCALE:1"=2'	DATE REV. 04/21/03	FIGURE C26	SHEET 1 Of 1

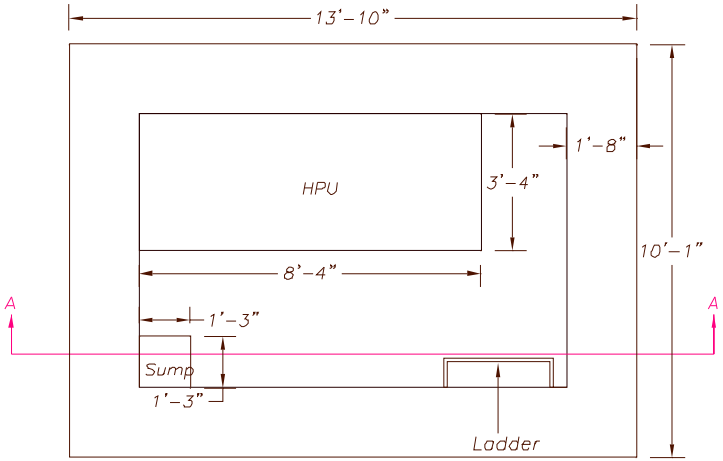

Plan View

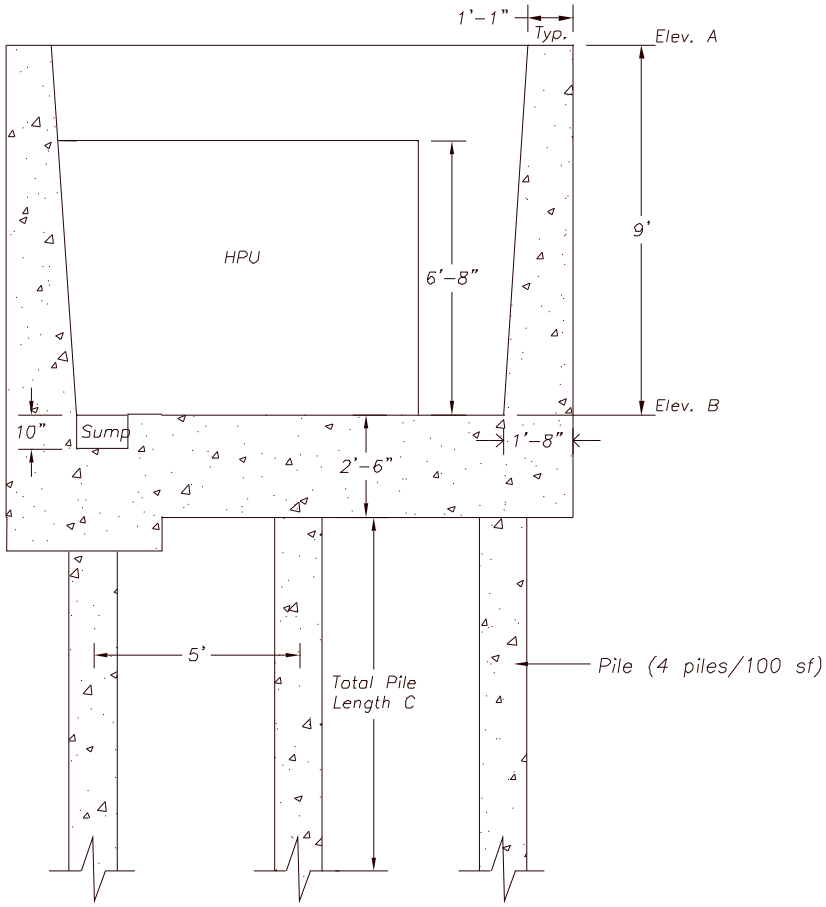

Section AA

Structure	Dimensions (ft)			
	Webb Tract at San Joaquin River	Webb Tract at False River	Bacon Island at Middle River	Bacon Island at Santa Fe Cut
A	+11	+11	+10.2	+10.4
B	+2	+2	+1.2	+1.4
C	64.5	49.5	71.2	66.4

IN-DELTA STORAGE PROGRAM		INTEGRATED FACILITY	
		Gate Control and HPU Vault	
SCALE: 1"=3'	DATE REV. 04/17/03	FIGURE C27	SHEET 1 Of 1

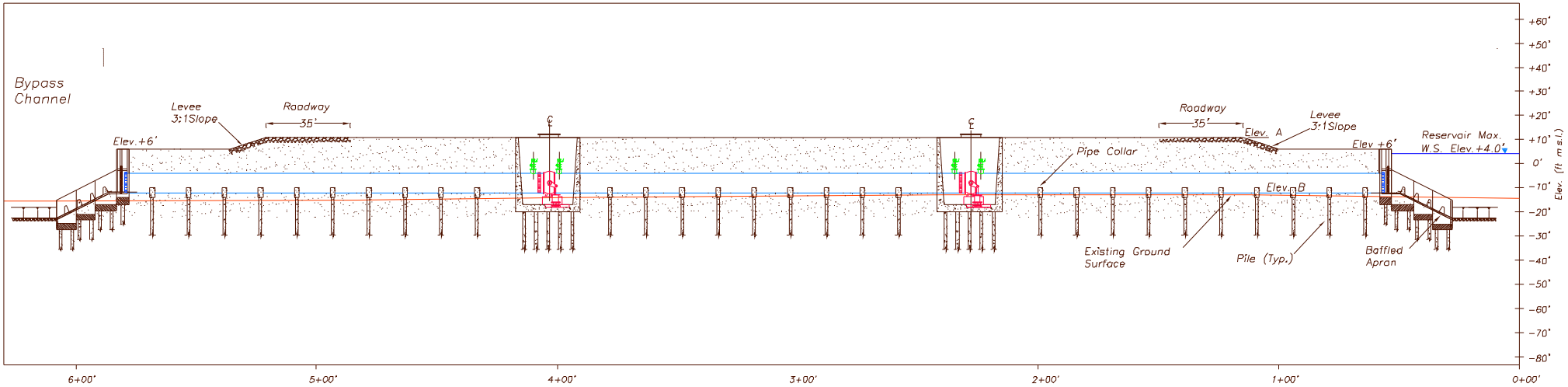

Conduit Profile

Scale: 1"=40'

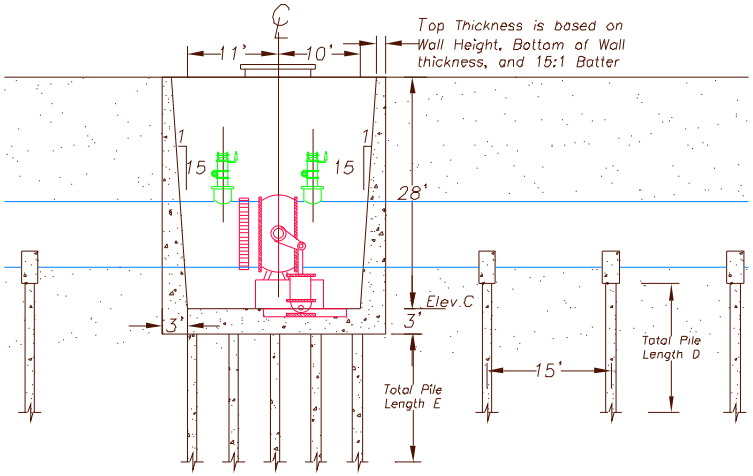

*Note: All Valve Vaults to be covered with 3 Sections of Steel Plate Covers supported by intermediate members

Valve Vault Structure

Scale: 1"=15'

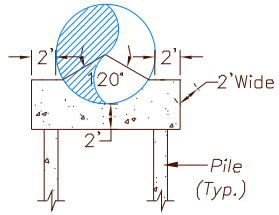

Typical Pipe Collar

Scale: 1"=10'

Structure	Dimensions (ft)			
	Webb Tract at San Joaquin River	Webb Tract at False River	Bacon Island at Middle River	Bacon Island at Santa Fe Cut
A	+11	+11	+10.2	+10.4
B	−12	−12	−10	−10
C	−17	−17	−17.8	−17.6
D	51	36	58	53
E	45	30	49.2	44.4

IN-DELTA STORAGE PROGRAM		INTEGRATED FACILITY	
		Conduit Profile & Valve Vault Structure	
SCALE:1"=40'	DATE REV. 04/25/03	FIGURE C28	SHEET 1 Of 1

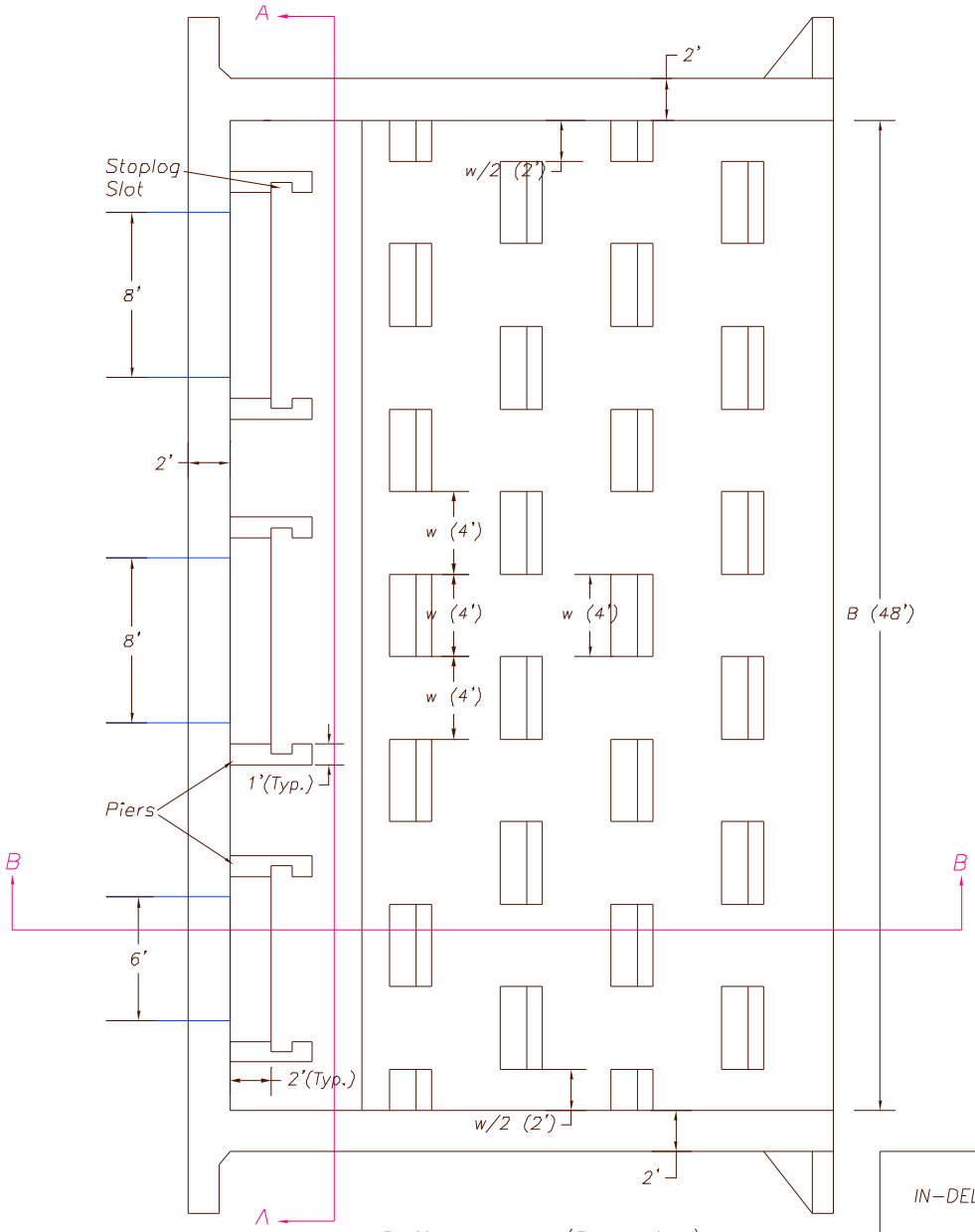

Baffled Apron (Plan View)

IN-DELTA STORAGE PROGRAM		INTEGRATED FACILITY	
		Baffled Apron (Plan View)	
SCALE: 1"=6'	DATE REV. 04/22/03	FIGURE C29	SHEET 1 Of 4

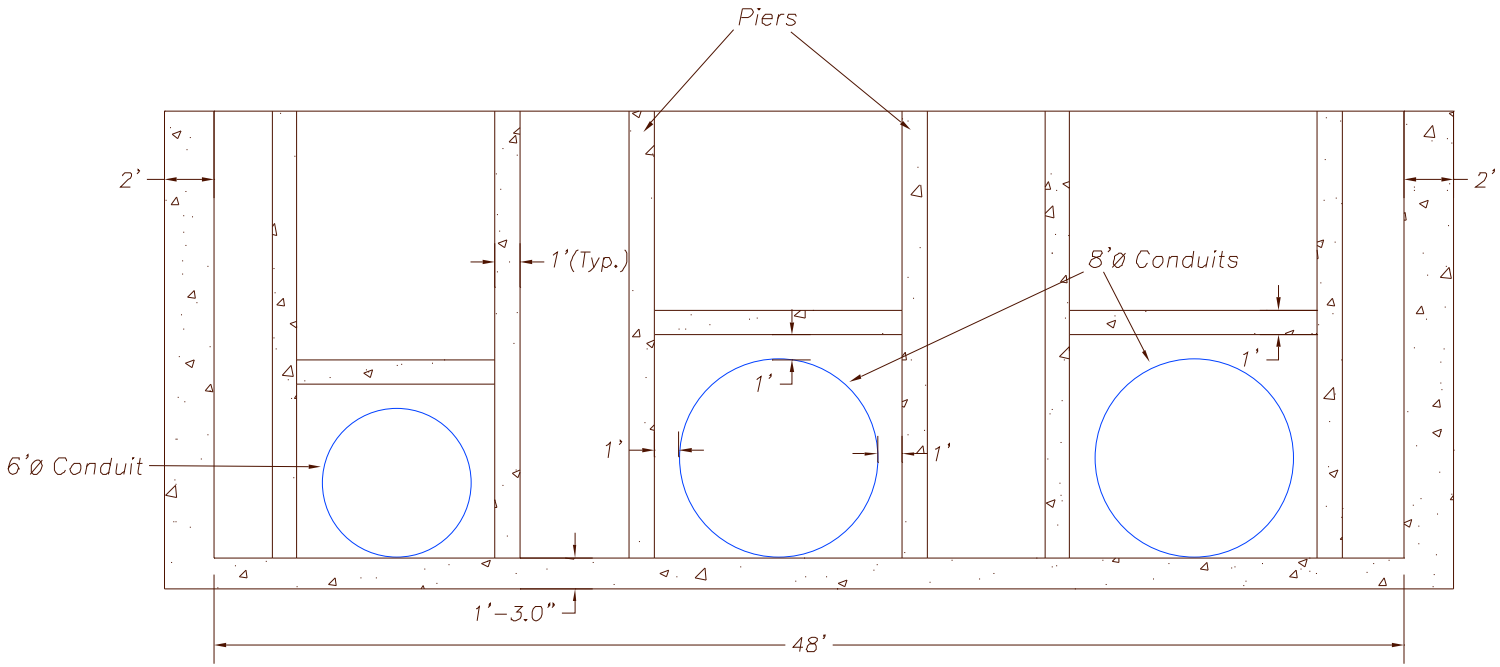

Section AA

IN-DELTA STORAGE PROGRAM		INTEGRATED FACILITY	
		Baffled Apron – Section AA (Front View)	
SCALE: 1"=5'	DATE REV. 04/22/03	FIGURE C30	SHEET 2 Of 4

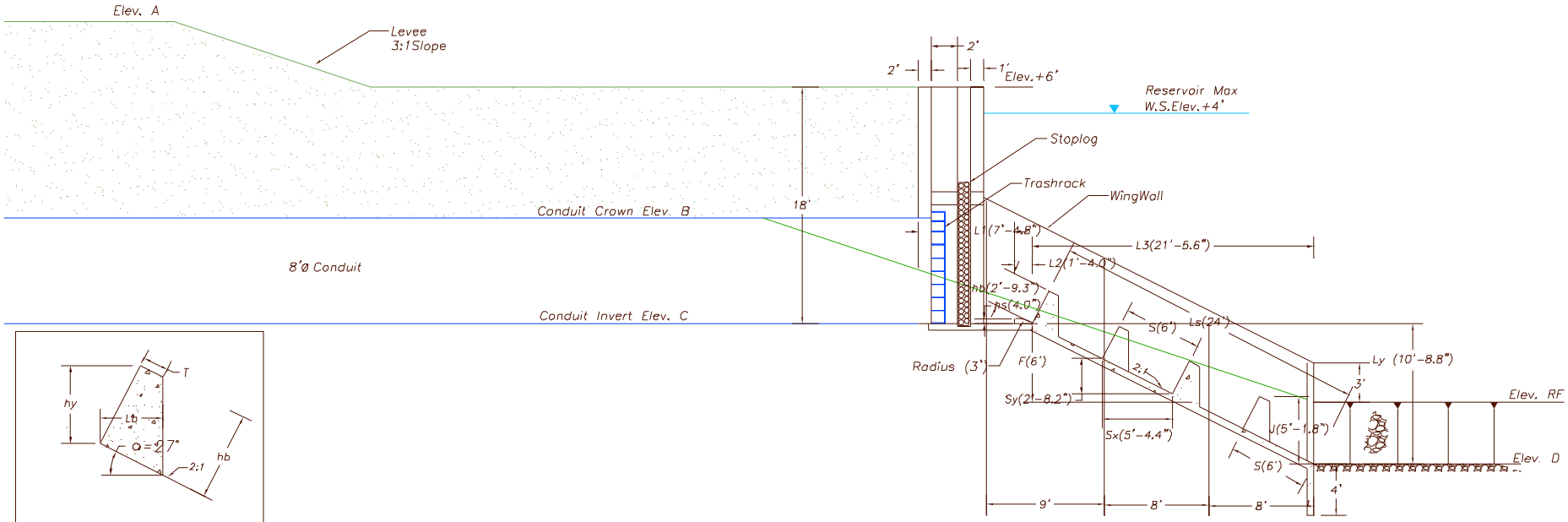

Section BB

Structure	Dimensions (ft)			
	Webb Tract at San Joaquin River	Webb Tract at False River	Bacon Island at Middle River	Bacon Island at Santa Fe Cut
A	+11	+11	+10.2	+10.4
B	−4	−4	−2	−2
C	−12	−12	−10	−10
D	−23	−23	−21	−21
RF	−18	−18	−16	−16

IN-DELTA STORAGE PROGRAM		INTEGRATED FACILITY	
		Baffled Apron – Section BB (Profile View)	
SCALE: 1"=8'	DATE REV. 04/29/03	FIGURE C31	SHEET 3 Of 4

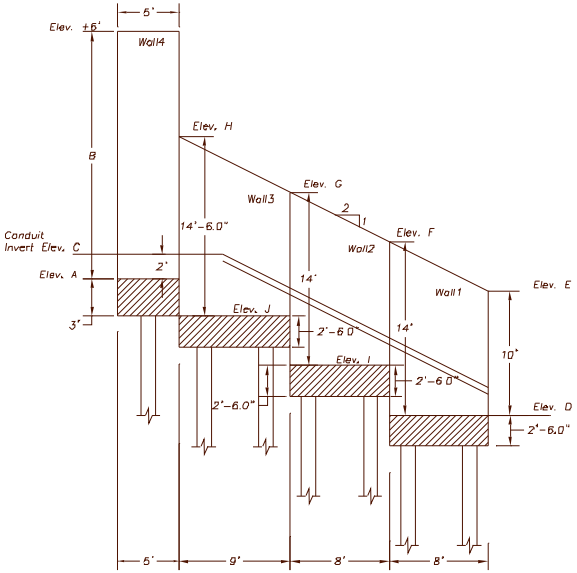

Retaining Wall Layout

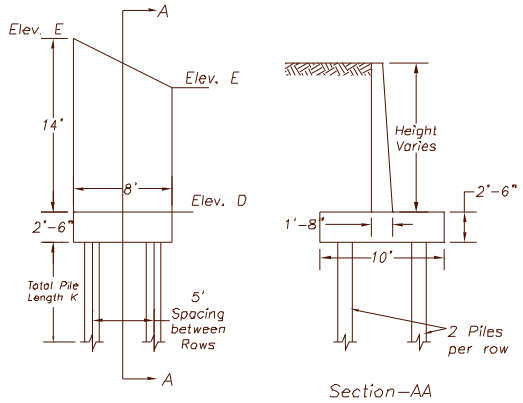

Retaining Wall 1 Layout

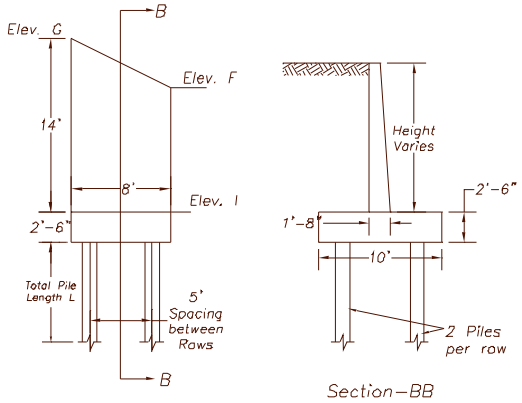

Retaining Wall 2 Layout

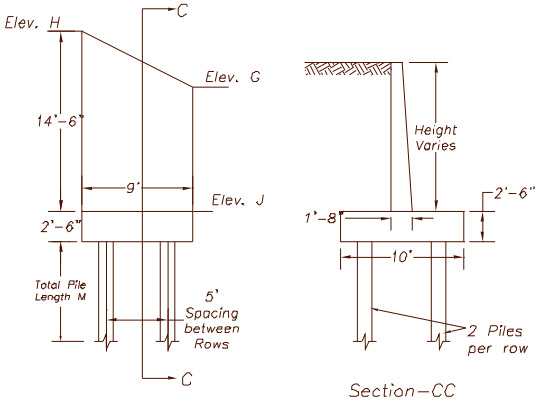

Retaining Wall 3 Layout

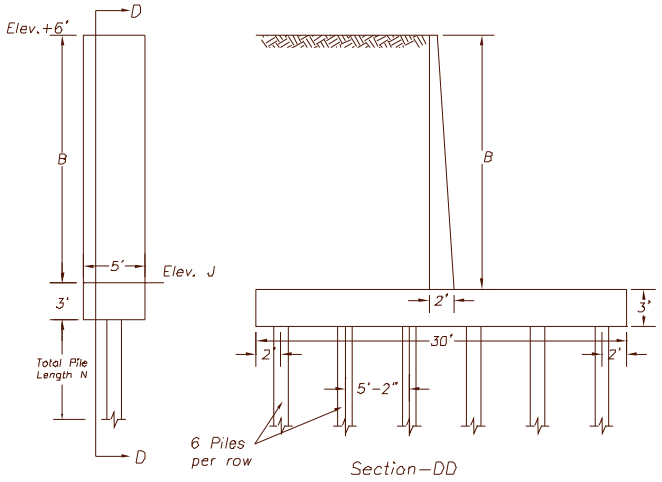

Retaining Wall 4 Layout

Structure	Dimensions (ft)			
	Webb Tract at San Joaquin River	Webb Tract at False River	Bacon Island at Middle River	Bacon Island at Santa Fe Cut
A	-14	-14	-12	-12
B	20	20	18	18
C	-12	-12	-10	-10
D	-25	-25	-23	-23
E	-15	-15	-13	-13
F	-11	-11	-9	-9
G	-7	-7	-5	-5
H	-2.5	-2.5	-0.5	-0.5
I	-21	-21	-19	-19
J	-17	-17	-15	-15
K	37.5	22.5	44.5	39.5
L	41.5	26.5	48.5	43.5
M	45.5	30.5	52.5	47.5
N	48	33	55	47

IN-DELTA STORAGE PROGRAM		INTEGRATED FACILITY	
		Baffled Apron - Retaining Wall Layout	
SCALE: 1"=10'	DATE REV. 04/25/03	FIGURE C32	SHEET 4 Of 4

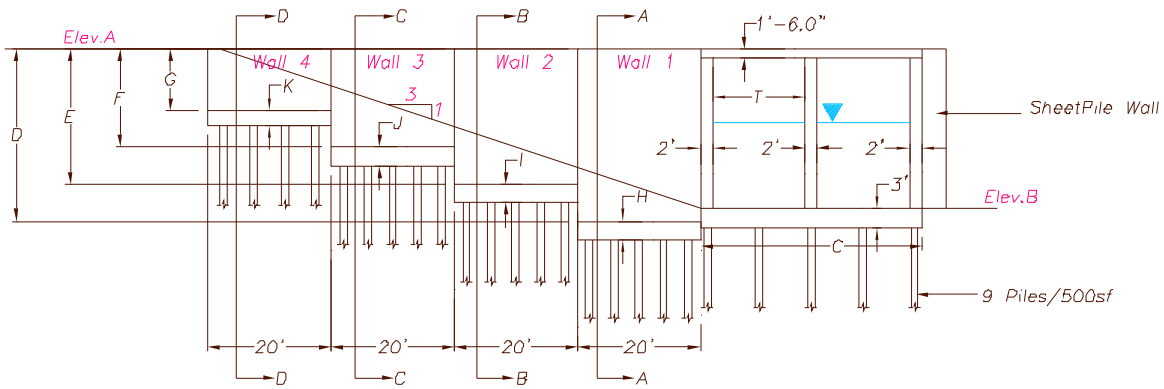

Bypass Channel Bridge Cross Section
Scale:1"=30'

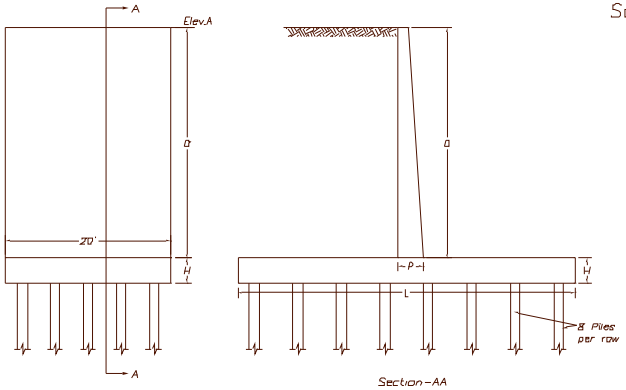

Retaining Wall 1 Layout
Scale:1"=15'

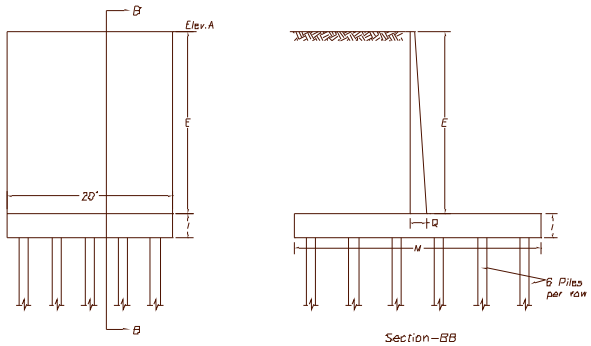

Retaining Wall 2 Layout
Scale:1"=15'

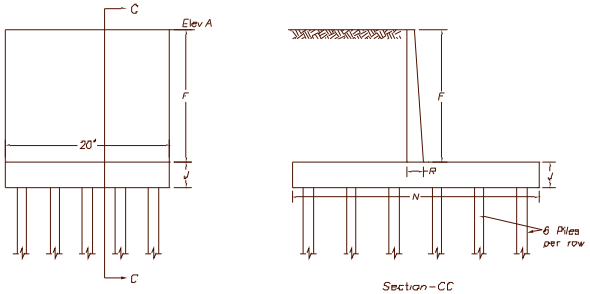

Retaining Wall 3 Layout
Scale:1"=15'

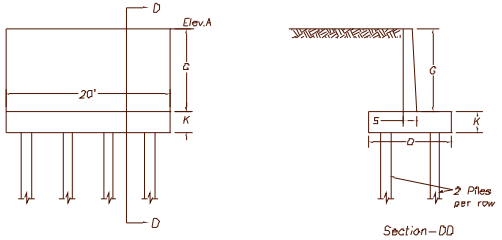

Retaining Wall 4 Layout
Scale:1"=15'

Structure	Dimensions (ft)			
	Webb Tract at San Joaquin River	Webb Tract at False River	Bacon Island at Middle River	Bacon Island at Santa Fe Cut
A	+11	+11	+10.2	+10.4
B	-15	-16	-12	-8
C	36	36	46	68
D	28	28	25	20
E	22	22	20	15
F	16	16	10	10
G	10	10	–	–
H	3	3	3	3
I	3	3	3	2.5
J	2.5	2.5	2.5	2.5
K	2.5	2.5	–	–
L	41	41	30	30
M	30	30	30	10
N	30	30	10	10
O	10	10	–	–
P	3	3	2	2
Q	2	2	2	1.7
R	2	2	1.7	1.7
S	1.7	1.7	–	–
T	15	15	20	31

IN-DELTA STORAGE PROGRAM		INTEGRATED FACILITY	
		Bypass Channel Bridge Cross Section	
SCALE: 1"=30'	DATE REV. 04/22/03	FIGURE C33	SHEET 1 Of 2